SMITH® JAY R. SMITH MFG. CO.®
MEMBER OF MORRIS GROUP INTERNATIONAL
POST OFFICE BOX 3237
MONTGOMERY, ALABAMA 36109-0237 (USA)
TEL: 334-277-8520 FAX: 334-272-7396 www.jrsmith.com
CUSTOMER DRIVEN SINCE 1926
MEMBER OF:

LOCATION

INLET STACK FITTINGS

90° DOUBLE VERTICAL STACK NO-HUB FITTING

FUNCTION: Recommended for use in institutions where one stack fitting serves two water closets. The 1 1/2" (38) or 2" (51) connection is provided for a lavatory waste when required.

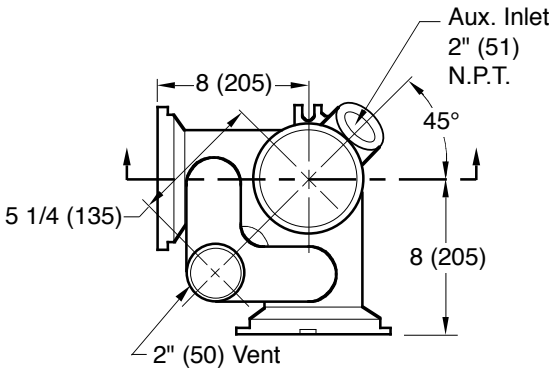

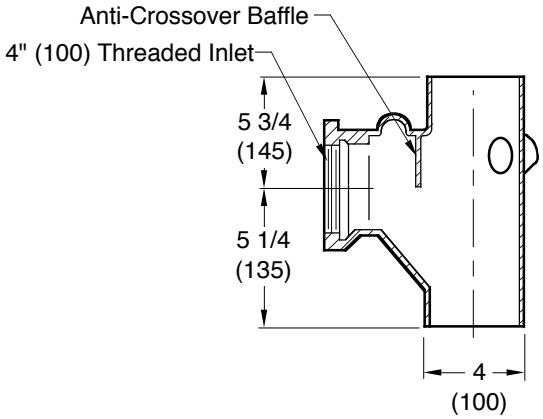

SECTIONAL VIEW

Fig. 0650Y. . . . . LESS AUX. INLET CONNECTION
Fig. 0651Y. . . . . WITH 1 1/2" (38) OR 2" (51) N.P.T. AUX. INLET CONNECTION (SPECIFY SIZE)

*Rear anchor supports available. Specify Suffix M51.

NOTE: Dimensions shown in parentheses are in millimeters.

REGULARLY FURNISHED:
Duco Cast Iron with NO-HUB Connection (2) 4" (100) Threaded Inlets and a 2" (51) Vent.

REV.	DATE	DESCRIPTION	BY	CKD. BY
D	9-1-98	Revised Drawing	CMD	JCS

WEIGHT POUNDS | VOLUME CUBIC FEET | FIGURE NUMBER 0650Y, 0651Y

D | DRAWING NUMBER S0650Y | SIZE A | SCALE: NONE | DATE: 8-26-98 | APPROVED BY: SJM | CHECKED BY: JM | DRAWN BY: CMD | FIGURE NUMBER 0650Y, 0651Y

DIMENSIONS ARE SUBJECT TO MANUFACTURERS TOLERANCE AND CHANGE WITHOUT NOTICE
WE CAN ASSUME NO RESPONSIBILITY FOR USE OF SUPERSEDED OR VOID DATA

WARNING: Cancer and Reproductive Harm - www.P65Warnings.ca.gov